THE EFFECT OF CELLULAR PHONE USE ON DRIVING PERFORMANCE

Toshiro ISHIDA
Professor
School of Human Sciences, Waseda University
Saitama, Japan

Tsuneo MATSUURA
Senior Researcher
National Research Institute of Police Science
Chiba, Japan

(Received July 3, 2001)

Many experiments using driving simulators or real roads have shown that using a cellular phone while driving may cause an accident because it delays visual information processing by the driver. In this research, we examined the influence on driving performance of cellular phone use on a course that simulated streets. Driving conditions were driving only, listening to the car radio, hands-free cellular phone use and using a cellular phone with the left hand. Driving performance measurements included braking response time to the brake lights of a preceding car, eye movement, distance from the vehicle in front and lane observance. The subjects were 50 drivers, including ten driving instructors.

The mean glance duration when manipulating a cellular phone was longer than when manipulating a hands-free set or car stereo. Braking reaction delay time increased in the following order: driving only, car radio, hands-free and, longest of all, cellular phone. When the cellular phone was used, car speed was slowest, and the distance from the vehicle in front became the longest. Glance duration other than to the front, indicating divided attention, was shortest during the cellular phone use and there were also fewer instances of eye movement. In the case of cellular phone use, stable driving appeared to be more difficult, as there was substantial steering wheel deflection.

In this experiment, it was confirmed that use of a hands-free set is effective to some extent, but driving performance was poorer than with driving only. Even though different forms of in-vehicle information apparatus were used, a delay in information processing was consistently found.

Key Words: Cellular phone, Brake reaction time, Eye movement, Car speed, Steering skill

1. INTRODUCTION

While travelling by car, a cellular phone can be a very effective and convenient means of obtaining directions. Also, contact with emergency services is enabled in the event of a traffic accident[1], and it has been reported that driver's alertness during monotonous and prolonged driving can be maintained by conversation during the journey[2]. However, safety has been a problem from the beginning. It has been reported that there is a fourfold increase in risk when a cellular phone is used during driving[1]. Mutoh[3] analyzed 129 accidents that occurred since cellular phones have come to be used while driving. It was clearly shown that there was a poor lookout and that accidents happened when receiving cellular phone calls. In 1998, 2,297 accidents involving cellular phone use have occured in Japan, and there have been 24 fatal accidents. There were 939 accidents when receiving a call, 634 while dialing, and 376 occurred during a call. There were 348 other accidents.

As mentioned above, accidents have been shown to be related to cellular phone use while driving. Moreover, many experiments have been conducted on how driving performance is influenced. The report of Brown, Tickner and Simmonds[4], considered to be the first research on the influence of mobile telephone use on driving performance, concludes that skills such as steering were not affected by mobile telephone use while driving, but perception and decision making were negatively affected.

Since then, accidents have increased with the development and spread of cellular phones, and many experiments on-road or using driving simulators have investigated the influence on driving performance of cellular phone use. The principal results are shown in Table 1. As measures of driving performance, researchers have recorded reaction time, distance from the vehicle in front, car speed and steering skill. Although results might change with experimental conditions (i.e., a subject's age and road conditions, etc.), the overall tendency was for mobile telephone operation to negatively affect reaction time, to reduce car speed, to produce substantial lateral deviation, for glance duration within-car to be increased and workload to increase.

The problem of cellular phone use while driving can be divided into making a call, receiving a call, and the call itself. When the existing research is examined, it shows that, although making and receiving a call has been found to distract attention, hands-free equipment is effective, and the problem is solvable to some extent. Cellular phone use while driving is forbidden in Switzerland and Italy, and only the use of hands-free equipment is allowed[19].

In relation to the divided attention of the driver, the telephone call itself can be a problem. If the contents of

Table 1 List of principal research results

Variable	Results	Study	Type of study
Response	Nonresponses increased among subjects over age 50 when distracted by telephone	McKnight & McKnight (1993)[5]	Simulator
	Negative effect on reaction time in easy driving task	Alm and Nilsson (1994)[6]	Simulator
	Delayed decision-making by elderly drivers	Alm and Nilsson (1995)[7]	Simulator
	Lengthened reaction times in the order of driving only, hands-free and hand-held	Horino (1997)[8]	On-road
	Simple reaction time impaired and increased oversight of stimulus	Tokunaga et al. (1997)[9]	Simulator
	Driver's ability to detect deceleration of car ahead increased during phone dialing and cognitive tasks	Lamble et al. (1999)[10]	On-road
Workload	Increase in workload (NASA-TLX)	Fairclugh et al. (1991)[11]	Simulator
		Alm and Nilsson (1994)[6]	Simulator
		Alm and Nilsson (1995)[7]	Simulator
	Heart rate and heart-rate variability increased by the demands of the task in hand	Brookhuis et al. (1991)[12]	On-road
	Hand-held increased rather than hands-free	Tokunaga et al. (1997)[9]	Simulator
	Heart rate increased during call	Haigney et al. (2000)[13]	Simulator
Lane position	Standard deviation of lateral position increased with manual dialing and tuning radio	Stein et al. (1987)[14]	Simulator
	Standard deviation of lateral position decreased when telephoning on the motorway	Brookhuis et al. (1991)[12]	On-road
	Telephoning in the city had a considerable effect on steering wheel movement	Brookhuis et al. (1991)[12]	On-road
	Increase in hard driving condition	Alm and Nilsson (1994)[6]	Simulator
	Road position deviation increased in the order of driving only, hands-free and radio manipulation	Briem & Hedman (1995)[15]	Simulator
	Drivers kept a lane position closer to the centerline for radio tuning and local-dialing tasks	Hanowski et al. (1997)[16]	Simulator
	Increased number of off-road excursions with hand-held device	Haigney et al. (2000)[13]	Simulator
Speed level	Decline of speed level	Alm and Nilsson (1994)[6]	Simulator
	Decline of vehicle speed during local-dialing task	Hanowski et al. (1997)[16]	Simulator
	Decline of speed level during call	Haigney et al. (2000)[13]	Simulator
Divided attention	Increase of total glance time during the dialing task	Tijerina et al. (1996)[17]	On-road
	Increase of glances longer than 2s	Wikman et al. (1998)[18]	On-road

a conversation become complicated, such as in solving a calculation problem as compared to a simple conversation, information acquisition and reaction times during driving are negatively influenced. This increased danger in relation to the content of conversation has been documented by many researchers. In addition, it has been noted that cellular phone use while driving risks diverting the driver's attention. Other risks include tuning a radio while driving.

The purpose of this study is to investigate the influence on driving performance of operating a telephone and of the telephone call itself, during a controlled on-road experiment, and to examine whether a hands-free set is an effective safety measure.

2. METHOD

2.1 Experimental procedure

The experiment vehicle was a sedan type passenger automobile with automatic transmission. On the course, the subject drove behind a leader car. Another car followed behind the subject vehicle. The leader car applied its brakes while driving at 40–50km/h according to the road sign, and the subject was required to apply the foot brake as quickly as possible from the lighting of the brake lamp of the leader car. The investigator who telephoned the subject rode in the leader car. Since a difference could arise in brake reaction time if the distance

between the leader car and the subject vehicle was extended, the subject was instructed to keep as close as was safely possible. First, the subject practiced over a simplified course, then drove in the four driving conditions: driving only, radio, hand-held and hands-free, at random.

2.2 Driving conditions

The subjects were given the following driving conditions:

- Both hands driving without auditory information (driving only condition).
- Both hands driving with auditory information (radio condition): the subject drives while hearing recorded news played back from a cassette tape.
- Single-handed driving during cellular phone use (hand-held condition): a subject drives having a cellular phone in one hand and gives a solution to a calculation, the addition of one figure and two figures, via the cellular phone.
- Both hands driving while using hands-free apparatus (hands-free condition): the subject drives while using hands-free apparatus and the conversation is the same as that for the hand-held condition.

2.3 Experimental course and measurement

The experiment was conducted on a multi-purpose street simulating test course in a Japan Safety Driving Center. The course was divided into six kinds of sections and corresponding measurements were taken. The measurements taken in each section are described below:

Section (1) Cassette operation and call receiving

The cassette operation was the insertion of a cassette tape from a half-inserted position. To receive the telephone call, the set was picked up from the passenger seat, a button was pressed, and the vehicle was driven single-handed during the conversation. In the hands-free condition, the subject receives the call by pushing a button by the A-pillar, and drives with both hands during the conversation. The times and frequency of eye movement from the telephone ringing to speaking were obtained from a videotape recording of the subject's face (for the cassette operation, until a subject put in a cassette tape on the instruction of an investigator and sound could be heard).

Section (2) Braking on a straight road

In this section, we timed and counted the subjects' eye movements to the front, right, left and other directions, measured the brake reaction time, the distance from the vehicle in front and the speed one second before braking, the longitudinal maximum G, and the time taken to answer the calculation problem when using the cellular phone. Brake reaction time, until a subject applies a brake pedal and the lighting of the brake lamp of the subject car from the lighting of the brake lamp of the leader car, was sampled at 10ms using a personal computer in the vehicle. Car speed, distance from the vehicle in front and maximum G were sampled at 100ms using the personal computer for vehicle situation measurement.

Section (3) Braking on a curve

Measurements were taken in the same manner as for braking on a straight road.

Section (4) Braking while turning right or left

Except for the distance from the vehicle in front and maximum G, measurements were taken as for the previous section's braking experiment.

Section (5) Keeping within a lane

A straight course with a width of 2m and a length of 200m was used. The starting point and target point of this section were shown by traffic cones. The subject was instructed to drive at a speed of 30km/h. Steering wheel angle, car speed, and answer time and a correction of calculation problem while using the cellular phone were measured.

Section (6) Keeping within a lane with width restrictions applied (Figure 1)

A straight course, 2m wide and 200m long was used, with two cones connected by a 3m rope, and a cone shifted every 1.5m. The subject was instructed to drive the course as fast as possible. Steering wheel angle, car speed,

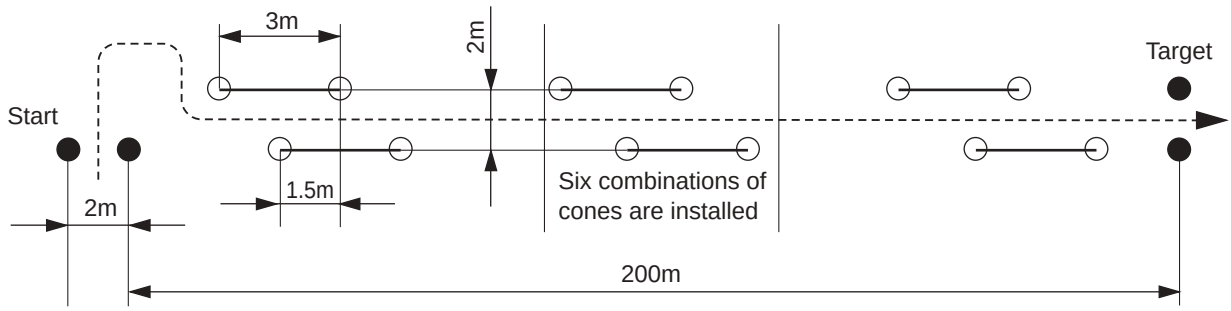

Fig. 1 Layout of the section of lane keeping with lane width restrictions

the number of contacts with cones and the calculation answer time and correction using the cellular phone were measured.

After the experiment, a questionnaire about the subject, the cellular phone use situation, and self-evaluation of an experiment was completed.

2.4 Subjects

The subjects were 50 drivers including ten Central Training Institute personnel (instructors). The age groups were: 24 subjects aged 20 years or less, 10 subjects aged 21 to 22 years and 10 who were 31 years or older. The instructors were the subjects who were aged 31 years old or older. Deviation was pronounced in a small, younger stratum. The only female subject was in the group aged 21–25 years.

Twenty-one subjects had held a license for one year or less, and 19 had held a license for five years or less and the 10 instructors had all held licenses for 10 years or more. Thirty-nine subjects answered that they drive every day and the number owning a cellular phone was 21.

3. RESULTS

3.1 Brake reaction time

The mean brake reaction time during the hand-held condition was 1.036 seconds, the latest of the four driving conditions. Others were at the level of 0.9 seconds (Figure 2). The standard deviation was least for driving only, but that for hand-held driving only ($t(49) = 4.333$, $p < 0.001$), hands-free driving only ($t(49) = 2.823$, $p < 0.01$), and hand-held hands-free ($t(49) = 1.717$, $p < 0.05$) was significant.

The brake reaction time of one second or more was considered to be a redundant reaction and the rate of occurrence was found to be: radio condition 34%, hand-held condition 50%, and hands-free 44%, which is also higher than driving only 28% (Figure 3).

Although the subject group of one to five years from license acquisition displayed their slowest brake reaction time for the hand-held condition, their redundant reaction was greater with the hands-free unit (40%) than with the hand-held (30%). The brake reaction time of the subject group who had held their licenses for less than one year was 1.064 seconds when driving only, and their slowest was 1.220 seconds with the hand-held. The group rate of occurrence of redundant reaction reached 95% with the hand-held, compared to 60% for driving only. Moreover, there was a significant difference for the main effects of

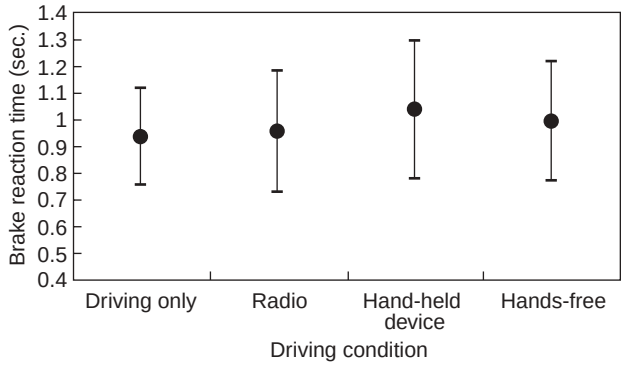

Fig. 2 Brake reaction time for each driving condition (The vertical lines show the range of ±1 SD)

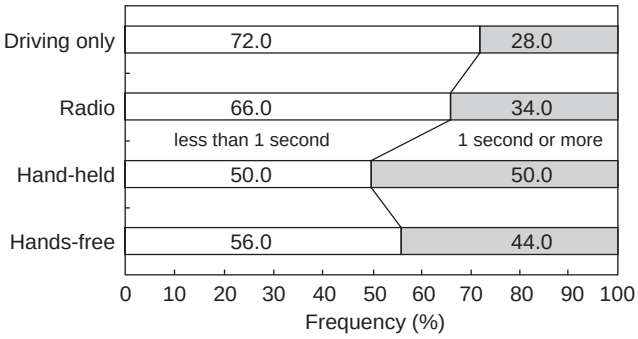

Fig. 3 Percentage of subjects with the reaction times of one second or more

experience and the driving condition as a result of Analysis of Variance (ANOVA) (experience, $F(2, 6) = 225.93$, $p < 0.0001$, driving condition, $F(3, 6) = 6.35$, $p < 0.05$).

Between the owner of a cellular phone, and a non-owner, the statistical difference in mean brake reaction time was slight, but it is accepted that, for the non-owner group, there will be increased redundant reaction in the case of hand-held and hands-free conditions.

3.2 Distance from vehicle in front and speed

The mean value of the distance from the leader car of each subject's brake reaction while driving only was 13.7m, while using the hand-held 14.2m, during the radio condition 14.0m and using the hands-free apparatus 13.5m. Hand-held use served to increase the distance (Table 2). For a subject of less than one year's license-holding, the hand-held condition produced an especially large value of up to 17.6m, although the distance from the vehicle in front tended to be larger in each of the driving conditions (Table 3). Using ANOVA, there was no difference by driving condition; the significance was in the level of experience ($F(2, 6) = 51.48$, $p < 0.05$).

The variation in timing for hand-held, radio and

Table 2 Car following distance (all subjects)

(m)

Driving condition	N	Mean	Median	S.D.
Driving only	50	13.7	13.1	3.702
Radio	50	14.0	13.8	3.992
Hand-held device	50	14.2	13.6	4.582
Hands-free	50	13.5	13.7	4.089

Table 3 Car following distance (less than one year driving experience)

(m)

Driving condition	N	Mean	Median	S.D.
Driving only	20	16.5	17.1	2.800
Radio	20	16.6	16.7	2.306
Hand-held device	20	17.6	18.0	3.491
Hands-free	20	16.3	16.1	2.097

hands-free conditions between the leader car and subject vehicle when the subject applied the brakes was one to two seconds. Hand-held produced a distribution spread across 1.0 to 1.5 seconds, and a level of 2.0 to 2.5 seconds. This was because a subject who had been licensed for less than one year would mostly produce this standard of response.

The mean car speed prior to the braking reaction of the subject in each driving condition is shown in Table 4. For all subjects, car speed was no different between driving only and the other conditions. However, car speed did become greater with driving experience from less than one year, one to five years and ten years or more. Although there was no difference for driving condition from ANOVA, the effect of experience was significant ($F(2, 6) = 51.22$, $p < 0.05$).

Table 4 Car speed by the driving condition and driving experience (km/h)

Driving experience	Driving condition	Mean	S.D.	N
All subjects	Driving only	24.3	2.299	50
	Radio	24.0	1.959	50
	Hand-held device	23.6	2.079	50
	Hands-free	24.0	1.717	50
Less than one year	Driving only	23.3	1.474	20
	Radio	22.9	1.729	20
	Hand-held device	22.0	1.575	20
	Hands-free	23.2	1.39	20
One to five years	Driving only	24.4	2.722	20
	Radio	24.5	1.852	20
	Hand-held device	24.4	1.719	20
	Hands-free	24.2	1.810	20
Ten years or more	Driving only	26.2	1.206	10
	Radio	25.5	0.963	10
	Hand-held device	25.4	0.925	10
	Hands-free	25.2	1.154	10

3.3 Eye movement at the time of operating apparatus

(1) The number of eye movements

While inserting a cassette, 83% of subjects looked once in that direction. When taking the cellular phone from the passenger seat and pushing the button to receive the call, 66.7% moved the eyes twice to the cellular phone. Eye movement in the case of hands-free equipment varied from once to three times, and it is thought that habituation to the apparatus was an influential factor (Table 5).

(2) Total glance duration

Of the total glance durations recorded towards the apparatus, the cassette insertion was the shortest (14.5%), receiving the call with the hand-held device was 36.9% and hands-free was 34.4%. As shown in Table 6, the mean total glance time to the hand-held device was longest and a statistically significant difference was observed between all operation conditions (hand-held device radio; $t(47) = 8.129$, $p < 0.0001$, hand-held device hands-free; $t(47) = 2.279$, $p < 0.05$, hands-free radio; $t(47) = 5.075$, $p < 0.0001$).

3.4 Eye movement during each driving condition

Table 7 shows the number of times of glance by the direction of a look in each driving condition. In addition, there being the deficit value, the number of subjects was 33.

Table 5 The number of eye movement to apparatus

Number of persons

Driving condition	N	1 time	2 times	3 times	4 times or more
Radio	48	39 (83.0)	6 (12.8)	1 (2.1)	1 (2.1)
Hand-held device	48	7 (14.6)	32 (66.7)	9 (18.8)	0 (0.0)
Hands-free	48	15 (31.3)	19 (39.6)	12 (25.0)	2 (4.2)

Inside of a parenthesis is %.

Table 6 Total glance duration to apparatus on operation section

(sec.)

Driving condition	N	Mean	Median	S.D.	Max.	Min.
Radio	48	1.05	0.83	0.636	2.83	0.0
Hand-held device	48	1.90	1.90	0.564	3.33	0.7
Hands-free	48	1.66	1.62	0.616	3.17	0.6

Table 7 The number of times of glance by the direction of a look excluding to the front in each driving condition

Direction of a look		Driving condition			
		Driving only	Radio	Hand-held device	Hands-free
Right	Mean	19.515	17.606*	18.242	17.970
	S.D.	6.515	8.321	10.592	9.211
Left	Mean	16.121	12.818**	12.394**	12.879**
	S.D.	8.022	5.720	7.640	6.877
Other	Mean	9.394	8.939	7.606	8.000
	S.D.	5.488	5.942	6.713	7.115
Total	Mean	59.568	53.405**	56.474*	54.937**
	S.D.	14.306	14.328	17.371	16.778

Note: As compared with driving only, the driving conditions of the significant differences were accepted by t-tests as shown (**p < 0.01, *p < 0.05).

The mean number of eye movements had some reduction in the left direction, although the other driving conditions were decreased to the right, the left, in addition to all directions as compared with driving only. This tendency was pronounced for the curve of all the road sections other than the straight section, and the right and left turn section.

3.5 Lane keeping

Steering wheel angle and speed were measured at sampling intervals of 100ms by a personal computer, and the deflection area of the steering wheel, mean speed, running time and the standard deviation of the deflection area of the steering wheel in the applicable section were computed. The following formula was used to perform the calculation of the deflection area of the steering wheel:

$$S = \sum_{i=1}^{n} (|x_i - \bar{x}| \times \Delta l_i)$$

x_i : steering wheel angle
Δl_i : distance moved per record
n : number of records

The value thus calculated contains the absolute value of the steering wheel angle and the speed so the value is large, having carried out the driving for which the steering wheel deflection is shown.

(1) Lane keeping on a straight line course

For the straight line course, the driving showed maximum or minimum values of all four conditions in which the deflection area of the steering was monitored. The frequency by driving condition is shown in Figure 4.

The driving conditions which produced the maximum value of deflection area applied to 23 persons using the cellular phone. This was the majority of the subjects. The minimum values were mostly for the driving only conditions, applied to 17 persons, and the least was the cellular phone as used by four persons.

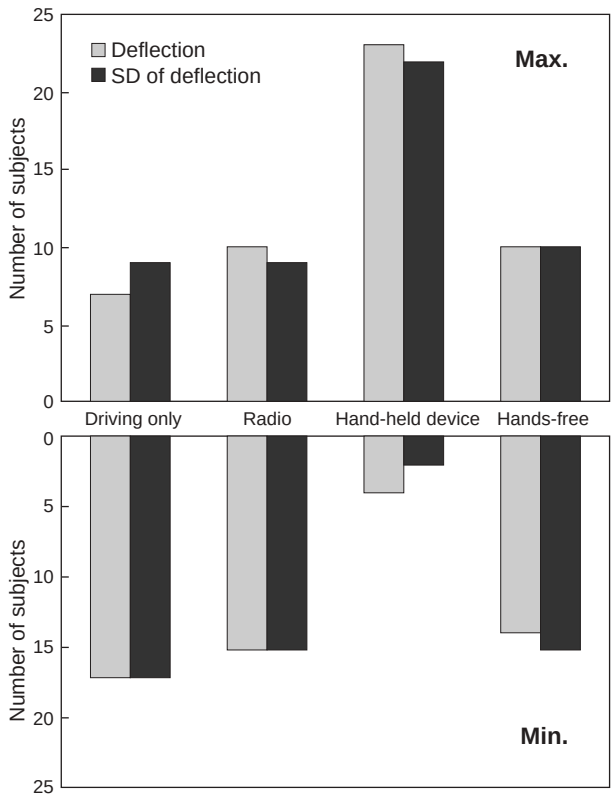

Fig. 4 Number of subjects exhibiting maximum and minimum deflection of steering wheel angle in each driving condition on the lane keeping course

The average value of the deflection area for each driving condition was largest for hand-held at 1,107, with the others in the order of radio, hands-free, and driving only (Table 8). A statistically significant difference was between hand-held and other driving conditions for the deflection area (driving only; $t(49) = 3.827$, $p < 0.001$, radio; $t(49) = 3.573$, $p < 0.001$, hands-free; $t(49) = 3.593$, $p < 0.001$). However, speed did not differ among driving conditions.

Table 8 Deflection of steering wheel by the driving condition on the lane keeping section

Driving condition	N	Mean	S.D.	Max.	Min.
Driving only	50	914	303	1,868	443
Radio	50	950	307	1,621	448
Hand-held device	50	1,107	321	2,197	542
Hands-free	50	937	276	1,590	583

(2) Lane keeping on restricted lane width

For the restricted lane width course, the frequency by driving condition is shown in Figure 5 as for the straight line. In the case of driving only, many subjects belonged to the minimum value group, vehicle deflection was comparatively small and driving time appeared short. However, for the hand-held condition, many subjects were in the maximum value group, vehicle deflection was significant and driving time was longer. Furthermore, in the hands-free condition, although there was comparatively little vehicle deflection, running time varied with the subject.

The average value of the deflection area for different driving conditions was greatest for hand-held at 1,514 and subsequent to this were radio, hands-free, and driving only (Table 9).

There was significant difference for the hand-held and driving only in average deflection area ($t(48) = 2.368$, $p < 0.05$), however, no statistically significant difference between the other driving conditions was observed.

In this section, the subject was instructed to drive as fast as was safely possible. The mean speed of the driving only condition was significantly fastest and hand-held use was the slowest ($t(48) = 4.485$, $p < 0.01$).

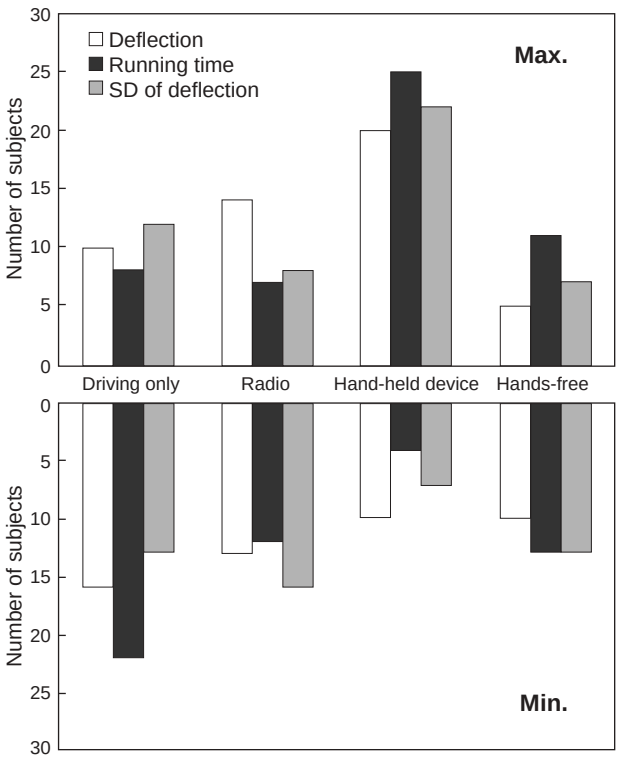

Fig. 5 Number of subjects exhibiting maximum and the minimum deflection of steering wheel angle in each driving condition on the limited lane width course

Table 9 Deflection of steering wheel by the driving condition on the limited lane width section

Driving condition	N	Mean	S.D.	Max.	Min.
Driving only	50	1,349	392	2,736	663
Radio	49	1,423	518	2,795	675
Hand-held device	50	1,514	415	2,533	767
Hands-free	50	1,364	414	2,531	786

(3) The number of times contact was made with a cone

The number of subjects making contact with a cone in the restricted width lane keeping section while driving only was seven (five subjects making a single contact, two making two or more contacts). While hearing the radio, seven subjects made contact (three persons making a single contact, four making two or more), using the hand-held device the number increased to thirteen (eight made a single contact, five made two or more) and for hands-free the number of subjects was six (five making a single contact, and only one contacting more than once). Although few subjects contacted the cones, the greatest number did so during use, almost the same as for the other driving conditions examined. Contacts occurred significantly for those subjects having held a license for less than one year, and all were subjects who had been driving for less than one year. Nine of the thirteen who made a cone contact when using the hand-held device were not cellular phone owners.

3.6 Solving the calculation problem

The question set while driving was an addition problem of one and two figures. Thirty questions were set before driving and 30 to 50 questions during driving. The number of subjects who asked for the question to be repeated once or more was 11 persons before driving, 15 when using hand-held, and 18 with hands-free apparatus. The rate of correct answers was seen to fall a little, with less than 90% correct by 13 subjects using the hands-free and hand-held, compared to 10 before driving (Figure 6).

4. DISCUSSION

Cellular phone use in the form of receiving and calling has generated 70% of traffic accidents. In this experiment, the eye movement time devoted to picking up the cellular phone from the passenger seat, to begin receiving the actual telephone call before returning attention to the original forward direction was 1.9 seconds. This

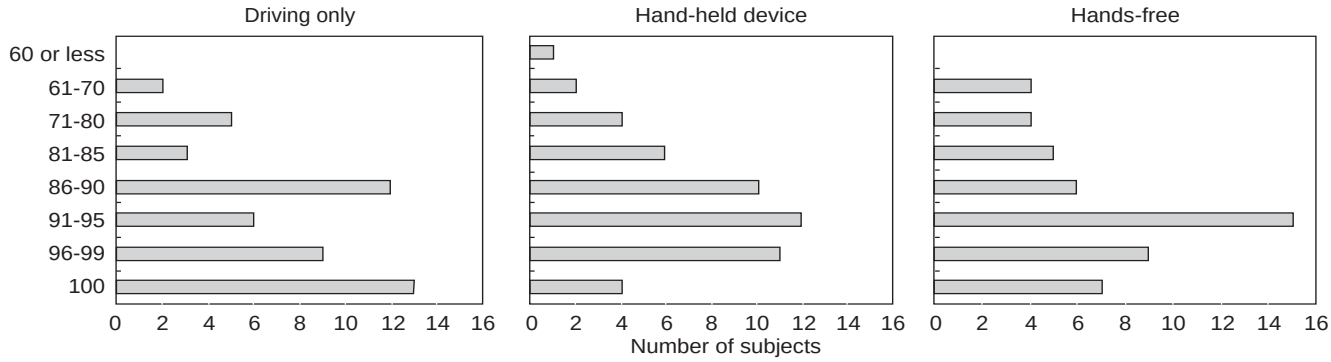

Fig. 6 Distribution of the rate of correct answers

amounts to having failed to carry out effective observation for nearly 2 seconds, by the time the telephone call properly began.

Zwahlen et al.[20] proposed a design guide for in-vehicle display or control. During the cellular phone operation in this research, results extended into the gray area or the unacceptable region of their proposal. Therefore, it can be said that cellular phone operation in the vehicle had a negative effect on safety. In the case of hands-free, it was 1.66 seconds and was short for 0.24 seconds. The hands-free apparatus used in this study was a type installed against the A pillar, and it is considered to have been within peripheral vision to some extent, which reduced time. If a cellular phone was positioned appropriately, although it could be expected to achieve a similar effect, there is a problem which is described below.

The mean brake reaction time for the four driving conditions in order of increasing lateness is control, driving while hearing news, hands-free, and cellular phone. Although it was naturally expected that the hands-free apparatus would deal with an addition problem compared to driving only without high secondary loading of the subject, however, a significant difference was also apparent between the hands-free and hand-held conditions. This fact has suggested the possibility that driving while holding a cellular phone in the right hand will delay information processing by the driver.

Of the four driving conditions, the slowest speed was recorded with the hand-held and the distance from the leader car was the greatest. This is considered to be because the driver lowers the target level of risk to compensate for a delay in information processing caused by cellular phone use, and tended to seek safety[21]. However, such driving behavior may cause disruption in the flow of traffic. Furthermore, although it may not be a great problem when driving on an open road, on congested roads or in fast traffic, since the driver must choose an appropriate speed and distance from the vehicle ahead according to the traffic flow, when there is a decline in the driver's information processing capability, driving will become dangerous.

Measuring eye movement, glance time other than forwards was used to quantify divided attention, and the number of instances of eye movement was used as an indicator of divided attention. The mean glance time for hand-held use other than forwards was less than for other driving conditions, and the number of instances of eye movement was also less.

The tendency for attention to be fixed to the front in cellular phone use as compared with driving only, and for eye movement to decrease, was apparent. This suggests that a conversation using a cellular phone can bring about a reduction in division of a driver's attention.

For lane keeping, the deflection area of the steering wheel was small during driving only and for hands-free, but was large with cellular phone use. From this fact, single-handed driving while using a cellular phone is considered to have affected driving stability.

5. CONCLUSION

From this experiment, it is apparent that cellular phone use while driving an automobile has the following influences on drivers:

(1) With single-handed driving using a cellular phone, brake reaction time becomes delayed.
(2) Car speed reduces and the distance from the vehicle in front becomes longer.
(3) The gaze is fixed to the front, eye movement decreases, and division of attention declines.

(4) With single-handed driving using a cellular phone there is significant deflection of the steering wheel, and stable driving is difficult.

(5) When initially operating the cellular phone, glance time towards the apparatus is substantial and the driver will be looking aside.

Although it was confirmed in this experiment that the use of a hands-free kit is effective to some extent, even across different forms of use, in-vehicle information apparatus will consistently delay information processing by the driver. In the future, engineering research and development with human consideration is regarded as necessary in respect of operation, layout and use of such apparatus.

On the basis of the related reports and this research, from November 1999, the National Police Agency forbade cellular phone use, except for hands-free, during driving. The examination of the subsequent accident trend is also a future subject for research.

REFERENCES

1. Donald, A. R., & Robert, J. T. Association between Cellular Telephone Calls and Motor Vehicle Collisions, The New England Journal of Medicine, Vol.336, No.7, pp. 453-458. (1997).
2. Amos, D. Effects of Rest and Secondary Task on Simulated Truck-Driving Task Performance, Human Factors, Vol.27, No.2, pp. 201-207. (1985).
3. Mutoh, M. Characteristic of the Traffic Accidents Occurred while Using Cellular Phones, Report of the National Research Institute of Police Science, Vol.38, No.1, pp. 20-26. (1997).
4. Brown, I. D., Tickner, A. H. and Simmonds, D. C. Interference between Concurrent Task of Driving and Telephoning, Journal of Applied Psychology, Vol. 53, No. 5, pp. 419-424. (1969).
5. McKnight, A. J. and McKnight, A. S. The Effect of Cellular Phone Use upon Driver Attention, Accident Analysis and Prevention, Vol.25, No.3, pp. 259-265. (1993).
6. Alm, H. and Nilsson, L. Changes in Driver Behaviour as a Function of Handsfree Mobile Phones- A Simulator Study, Accident Analysis and Prevention, Vol.26, No.4, pp. 441-451. (1994).
7. Alm, H. and Nilsson, L. The Effects of a Mobile Telephone Task on Driver Behaviour in a Car Following Situation, Accident Analysis and Prevention, Vol.27, No.5, pp. 707-715. (1995).
8. Horino, S. Ergonomic Design of Safety for Car-multi-media Device, Proceedings of JSAE Symposium. (1997).
9. Tokunaga, R. A., Ozawa, M., Hagiwara, T., Takagi, H. and Shimojo, A. Effects of Cellular Telephone Manipulation on Driver's Performance, Proceedings of JSAE Annual Congress, Vol.976, pp. 195-198. (1997).
10. Lamble, D., Kauranen, T., Laakso, M. & Summala, H. Cognitive Load and Detection Thresholds in Car Following Situations: Safety Implications for Using Mobile (Cellular) Telephones while Driving, Accident Analysis and Prevention, Vol.31, No.6, pp. 317-623. (1999).
11. Fairclough, S. H., Ashby, M. C., Ross, T. & Parkes, A. M. Effects of Handsfree Telephone Use on Driving Behavior, FISATA: 24th International Symposium on Automotive Technology & Automation, pp.403-409. (1991).
12. Brookhuis, K. A., de Vries, G. & de Waard, D. The Effects of Mobile Telephoning on Driving Performance, Accident Analysis and Prevention, Vol.23, No.4, pp. 309-316. (1991).
13. Haigney, D. E., Taylor, R. G. & Westerman, S. J. Concurrent Mobile (Cellular) Phone Use and Driving Performance: Task Demand Characteristics and Compensatory Processes, Transportation Research Part F, Vol.3, pp.113-121. (2000).
14. Stein, A. C., Parseghian, Z. & Allen, R. W. A Simulator Study of the Safety Implications of Cellular Mobile Phone Use, 31st Annual Proceedings of the American Association for Automotive Medicine, pp.181-200. (1987).
15. Briem, V. and Hedman, L. R. Behavioural Effects of Mobile Telephone Use during Simulated Driving, Ergonomics, Vol.38, No.12, pp. 2536-2562. (1995).
16. Hanowski, R., Kantowitz, B. & Tijerina, L. Heavy Vehicle Driver Workload Assessment Task 7B: In-Cab Test Message System and Cellular Phone Use by Heavy Vehicle Drivers in a Part-Task Driving Simulator, DOT-HS-808-467 (7B). (1997).
17. Tijerina, L., Kiger, S., Rockwell, T. & Tornnow, C. Heavy Vehicle Driver Workload Assessment Task 7A: In-Cab Test Message System and Cellular Phone Use by Heavy Vehicle Drivers on the Road, DOT-HS-808-467 (7A). (1996).
18. Wikman, A. S., Nieminen, T. & Summala, H. Driving Experience and Time-Sharing during In-Car Tasks on Roads of Different Width, Ergonomics, Vol.41, No.3, pp.358-372. (1998).
19. Petica, S. Safety Implications of In-Vehicle Devices – Risk Assessment of In-Car Radiotelephone Use, The Second World Congress on Intelligent Transport Systems '95 Yokohama, (1995).
20. Zwahlen, H. T., Adams, Jr. C. C. & DeBald, D. P. Safety Aspects of CRT Touch Panel Controls in Automobiles, In Gale, A. G. et al. (Eds.): Vision in Vehicle II, pp. 335-344, Elsevier Science Publishers B.V. (1988).
21. Wilde, G.J.S., The Theory of Risk Homeostasis: Implications for Safety and Health, Risk Analysis, Vol. 2, No. 4, pp. 209-225. (1982).

ACKNOWLEDGEMENT

This paper is based on the work carried out in the Japan Safety Driving Center. We appreciate the cooperation of the research members.